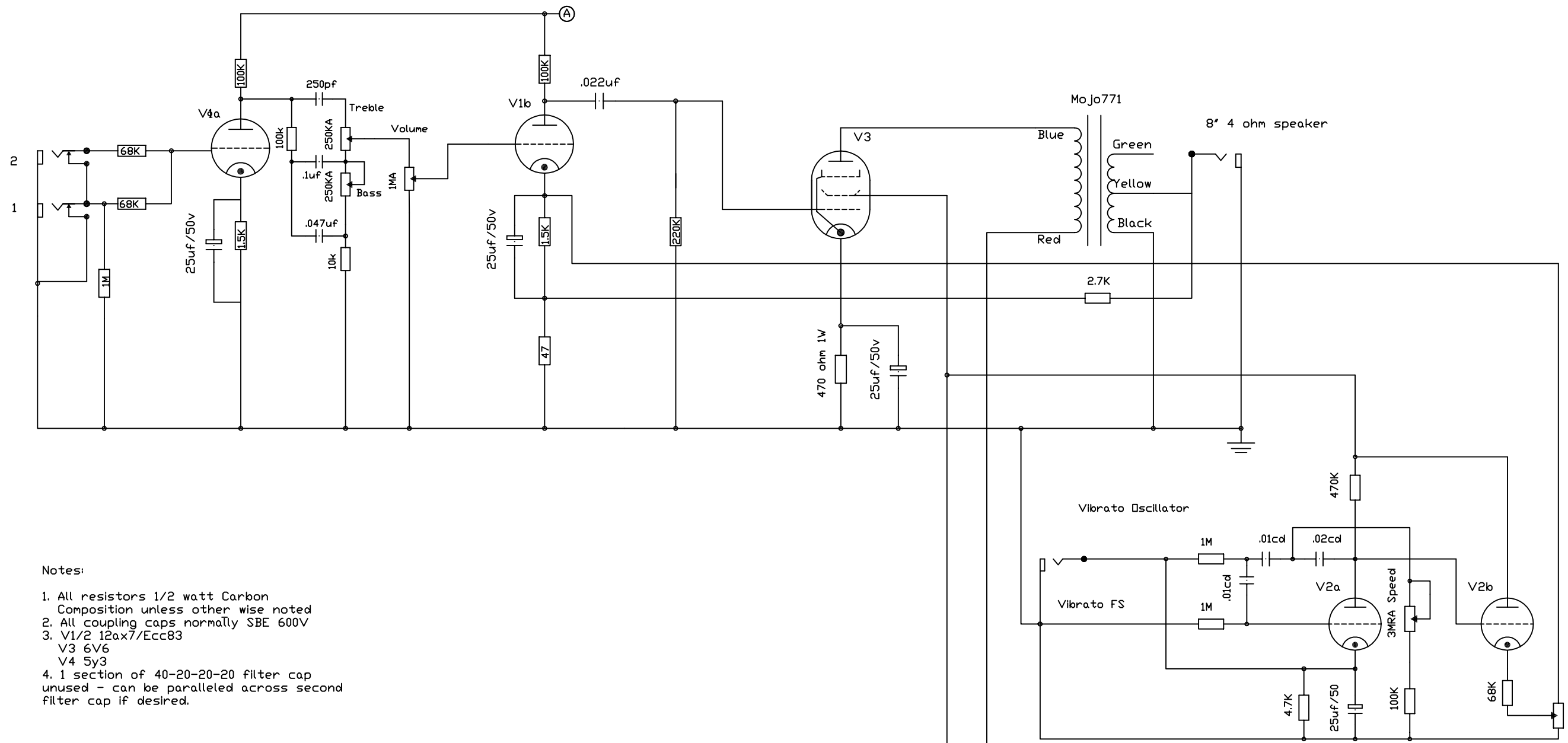

Notes:

1. All resistors 1/2 watt Carbon Composition unless other wise noted
2. All coupling caps normally SBE 600V
3. V1/2 12ax7/Ecc83
   V3 6V6
   V4 5y3
4. 1 section of 40-20-20-20 filter cap unused - can be paralleled across second filter cap if desired.

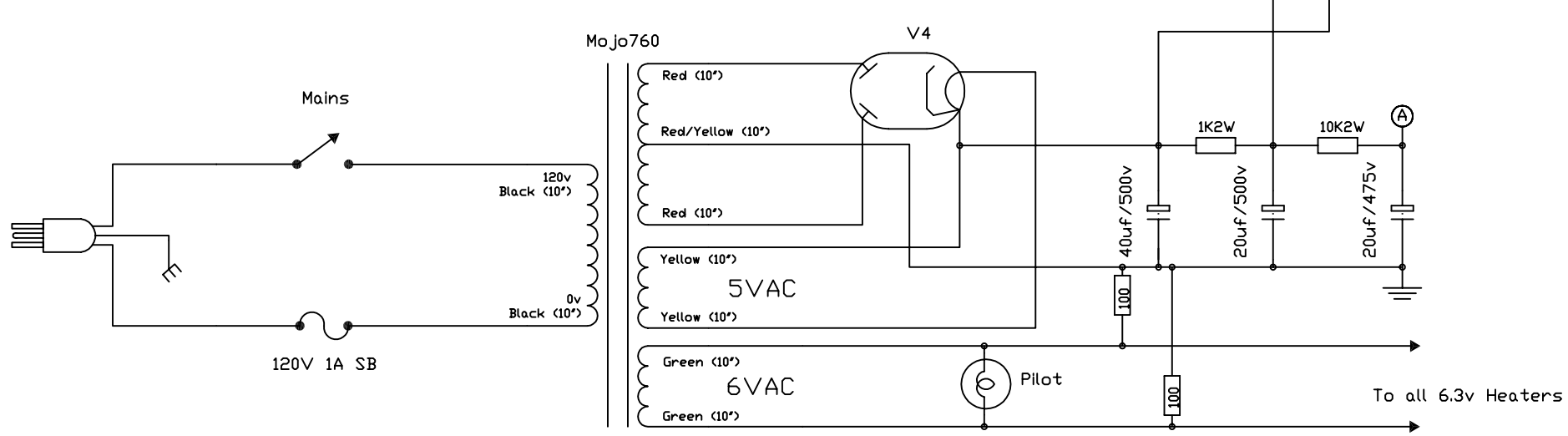

Material N/A	
Finish N/A	
Tolerance N/A	Units N/A
Part Vibro Champ Schematic	
For Mojo	
Drawn By Andy Turner	
Scale N/A	Mojo Musical Supply Tel 910-259-7291 Fax 910-259-7292
Date 9-15-08	
Pg 1 of 1	