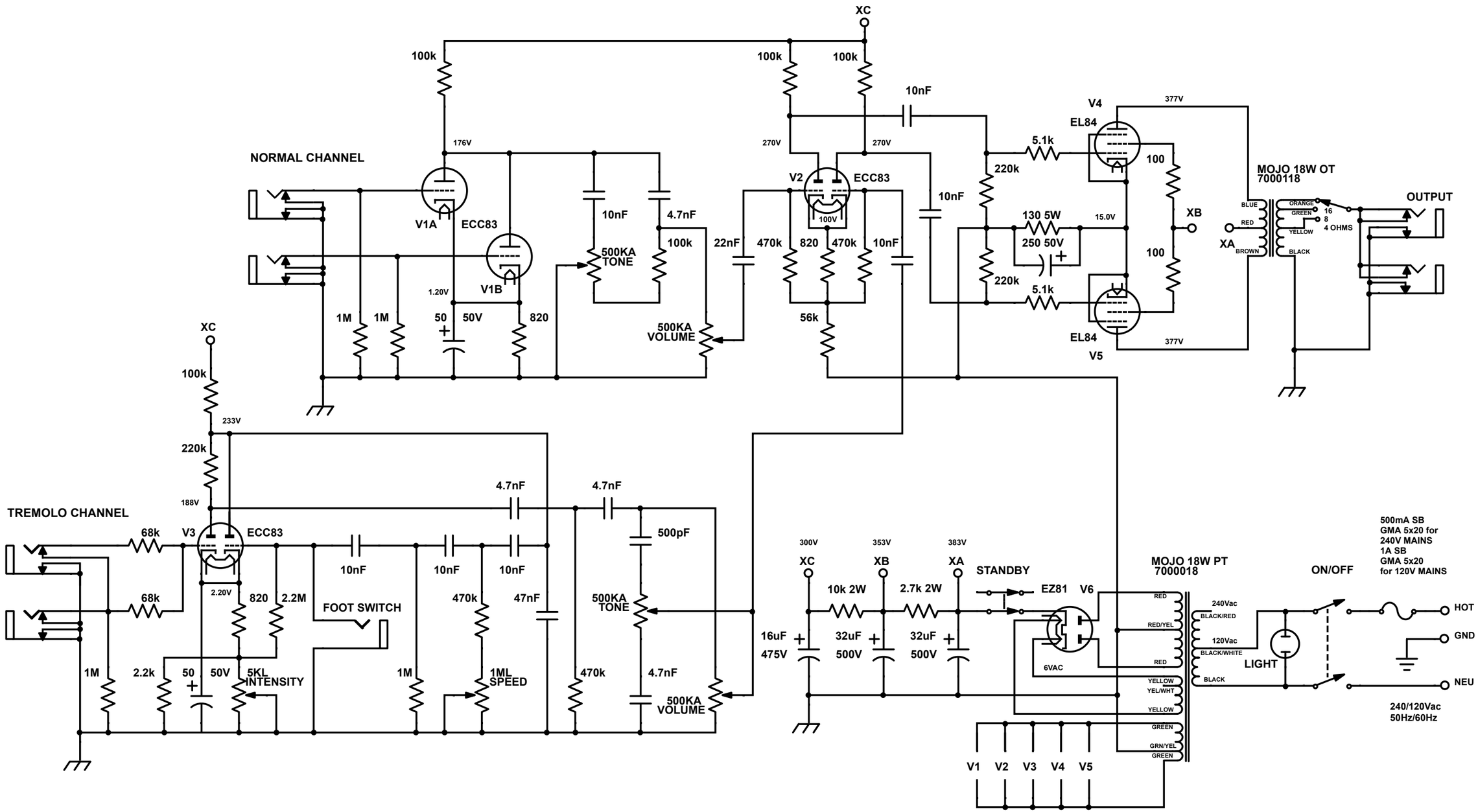

All resistors are rated for 1W unless noted.
All capacitors are rated for 630V unless noted.
All DC voltages were measured with respect to chassis ground.

BRITISH 18W
REVISION 2
2/8/21