MOJOTONE BRITISH 45 WIRING DIAGRAM

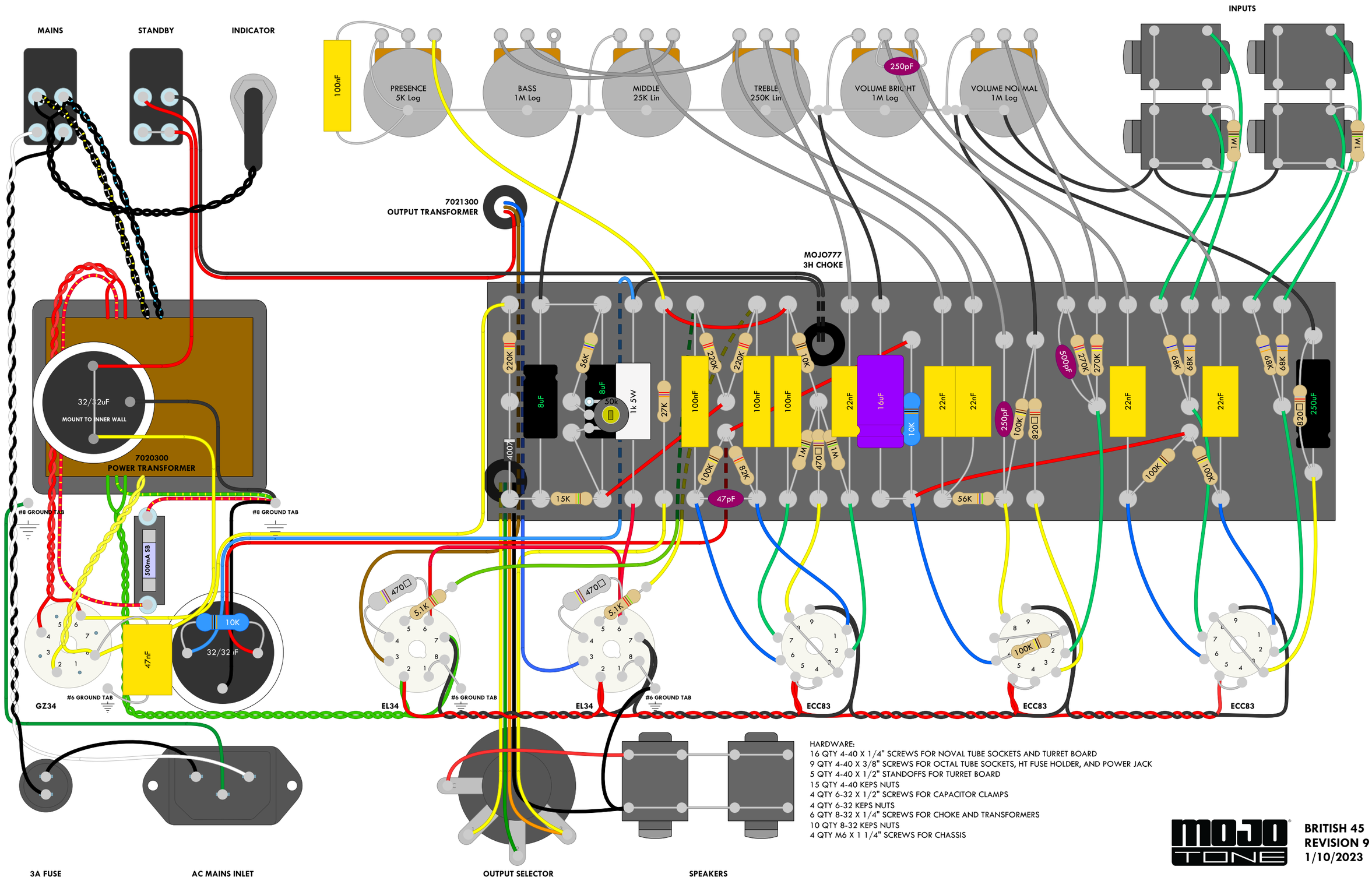

HARDWARE:
16 QTY 4-40 X 1/4" SCREWS FOR NOVAL TUBE SOCKETS AND TURRET BOARD
9 QTY 4-40 X 3/8" SCREWS FOR OCTAL TUBE SOCKETS, HT FUSE HOLDER, AND POWER JACK
5 QTY 4-40 X 1/2" STANDOFFS FOR TURRET BOARD
15 QTY 4-40 KEPS NUTS
4 QTY 6-32 X 1/2" SCREWS FOR CAPACITOR CLAMPS
4 QTY 6-32 KEPS NUTS
6 QTY 8-32 X 1/4" SCREWS FOR CHOKE AND TRANSFORMERS
10 QTY 8-32 KEPS NUTS
4 QTY M6 X 1 1/4" SCREWS FOR CHASSIS

MOJO TONE

BRITISH 45
REVISION 9
1/10/2023