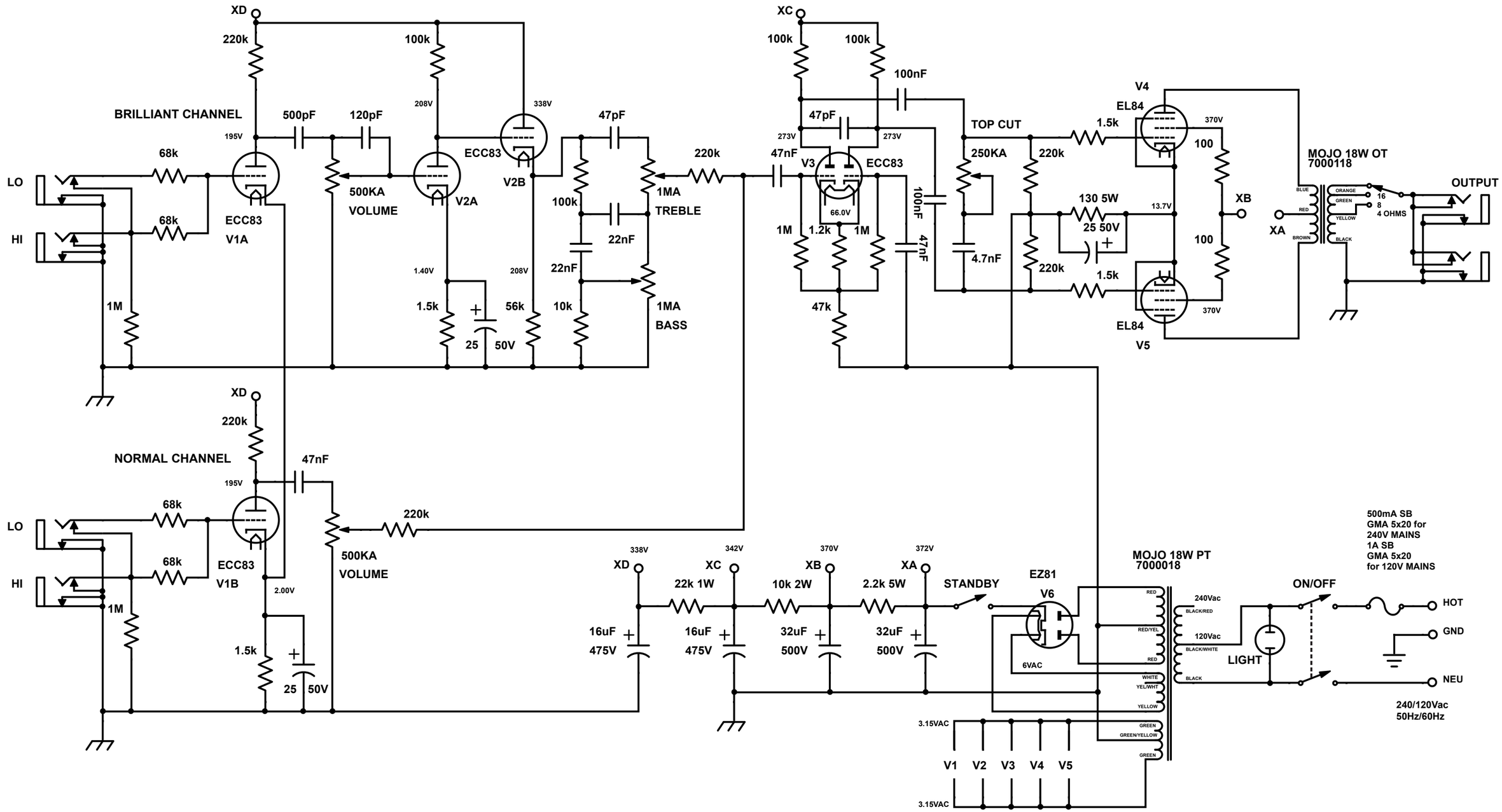

All resistors are rated for 1W unless specified.
All capacitors are rated for 630V unless specified.
All voltages were measured with respect to chassis ground.

MOJO TONE

NC3015
REVISION 4
11/10/2020