REV CHANGE			
REV	BY	DATE	NOTE

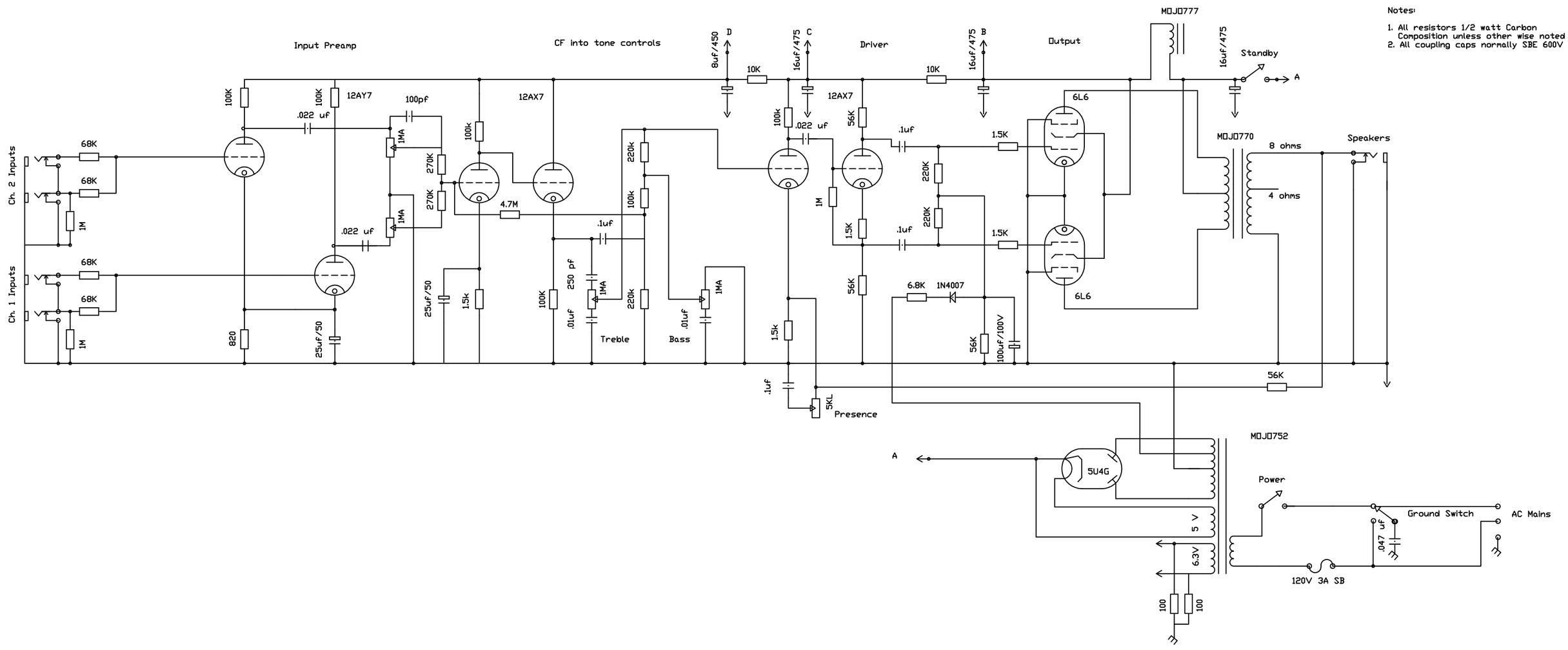

Notes:

1. All resistors 1/2 watt Carbon Composition unless other wise noted
2. All coupling caps normally SBE 600V

TOLERANCE: N/A	UNITS: N/A	PART NAME: MK-PRO-SCH	FILE: MK-PRO-SCH.DWG	DATE: 03-19-08
MATERIAL: N/A		PART DESC: Schematic For Mojo SUPER	DRAWN BY: Andy Turner	PRINT SCALE: N/A
FINISH: N/A		MOJO PN: D-MK-PRO-SCH		DRAWN SCALE: N/A
				Pg: 1of1

Mojo Musical Supply
Tel 910-259-7291 Fax 910-259-7292